Cambridge Assessment International Education

Cambridge International AS & A Level

CANDIDATE NAME									
CENTRE NUMBER						CANDIDATE NUMBER				

9035634896

PHYSICS **9702/23**

Paper 2 AS Level Structured Questions **May/June 2023**

1 hour 15 minutes

You must answer on the question paper.

No additional materials are needed.

INSTRUCTIONS

- Answer **all** questions.
- Use a black or dark blue pen. You may use an HB pencil for any diagrams or graphs.
- Write your name, centre number and candidate number in the boxes at the top of the page.
- Write your answer to each question in the space provided.
- Do **not** use an erasable pen or correction fluid.
- Do **not** write on any bar codes.
- You may use a calculator.
- You should show all your working and use appropriate units.

INFORMATION

- The total mark for this paper is 60.
- The number of marks for each question or part question is shown in brackets [ ].

This document has **20** pages. Any blank pages are indicated.

© UCLES 2023

Data

acceleration of free fall	g	=	$9.81\ \text{m s}^{-2}$
speed of light in free space	c	=	$3.00 \times 10^{8}\ \text{m s}^{-1}$
elementary charge	e	=	$1.60 \times 10^{-19}\ \text{C}$
unified atomic mass unit	1 u	=	$1.66 \times 10^{-27}\ \text{kg}$
rest mass of proton	m_p	=	$1.67 \times 10^{-27}\ \text{kg}$
rest mass of electron	m_e	=	$9.11 \times 10^{-31}\ \text{kg}$
Avogadro constant	N_A	=	$6.02 \times 10^{23}\ \text{mol}^{-1}$
molar gas constant	R	=	$8.31\ \text{J K}^{-1}\ \text{mol}^{-1}$
Boltzmann constant	k	=	$1.38 \times 10^{-23}\ \text{J K}^{-1}$
gravitational constant	G	=	$6.67 \times 10^{-11}\ \text{N m}^2\ \text{kg}^{-2}$
permittivity of free space	ε_0	=	$8.85 \times 10^{-12}\ \text{F m}^{-1}$
	$\left(\frac{1}{4\pi\varepsilon_0}\right.$	=	$\left.8.99 \times 10^{9}\ \text{m F}^{-1}\right)$
Planck constant	h	=	$6.63 \times 10^{-34}\ \text{J s}$
Stefan–Boltzmann constant	σ	=	$5.67 \times 10^{-8}\ \text{W m}^{-2}\ \text{K}^{-4}$

Formulae

uniformly accelerated motion	s	=	$ut + \frac{1}{2}at^2$
	v^2	=	$u^2 + 2as$
hydrostatic pressure	Δp	=	$\rho g \Delta h$
upthrust	F	=	$\rho g V$
Doppler effect for sound waves	f_o	=	$\frac{f_\text{s} v}{v \pm v_\text{s}}$
electric current	I	=	$Anvq$
resistors in series	R	=	$R_1 + R_2 + \ldots$
resistors in parallel	$\frac{1}{R}$	=	$\frac{1}{R_1} + \frac{1}{R_2} + \ldots$

© UCLES 2023

BLANK PAGE

1 A well has a depth of 36 m from ground level to the surface of the water in the well, as shown in Fig. 1.1.

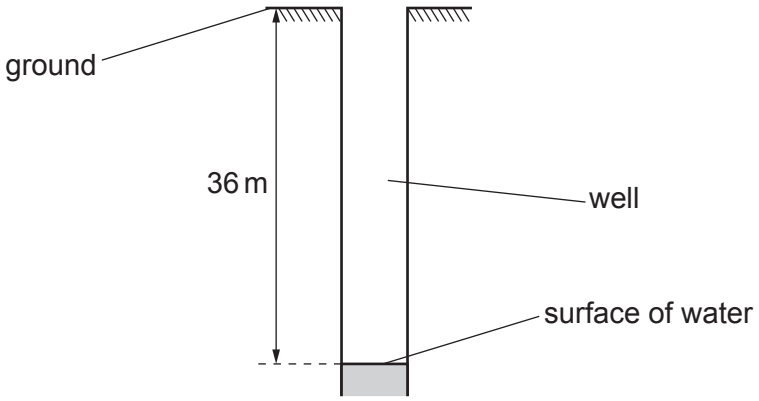

Fig. 1.1 (not to scale)

A student wishes to find the depth of the well. The student plans to drop a stone down the well and record the time taken from releasing the stone to hearing the splash made by the stone as it enters the water.

(a) Assume that air resistance is negligible and that the stone is released from rest.

Calculate the time taken for the stone to fall from ground level to the surface of the water.

time = ... s [2]

© UCLES 2023

(b) The time recorded by the student using a stop-watch is not equal to the time in **(a)**.

Suggest **three** possible reasons, other than the effect of air resistance, for this difference.

1 .....

.....

2 .....

.....

3 .....

.....

[3]

(c) The student repeats the experiment three times and uses the results to calculate the depth of the well. The values are shown in Table 1.1.

Table 1.1

	1st experiment	2nd experiment	3rd experiment
depth/m	54.4	53.9	54.1

The true depth of the well is 36.0 m. Explain why these results may be described as precise but not accurate.

.....

.....

.....

..... [2]

[Total: 7]

2 A sphere floats in equilibrium on the surface of sea water of density 1050 kg m^{-3}, as shown in Fig. 2.1.

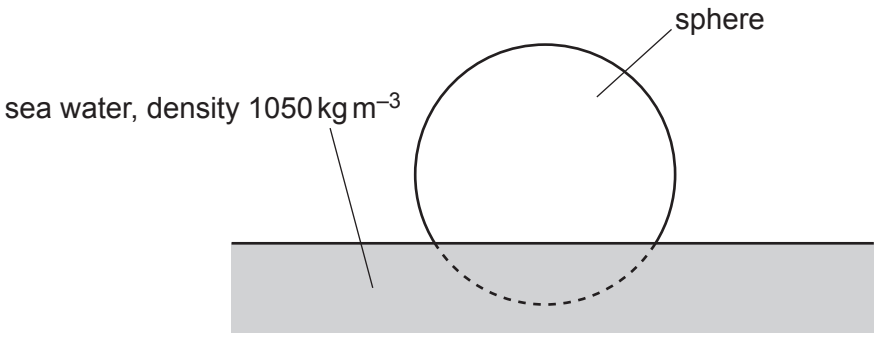

Fig. 2.1

(a) 21% of the volume of the sphere is below the surface of the water.

Calculate the density of the sphere.

density = ... kg m^{-3} [2]

(b) The sphere is now held so that its entire volume is below the surface of the water. The sphere is then released.

(i) Calculate the initial acceleration of the sphere.

acceleration = ... m s^{-2} [3]

© UCLES 2023

(ii) The sphere accelerates upwards but remains entirely below the surface of the water.

State and explain what happens to the acceleration of the sphere as its velocity begins to increase.

.....

.....

.....

..... [3]

[Total: 8]

3 **(a)** State the principle of conservation of momentum.

.....

.....

..... [2]

(b) A firework is initially stationary. It explodes into three fragments A, B and C that move in a horizontal plane, as shown in the view from above in Fig. 3.1.

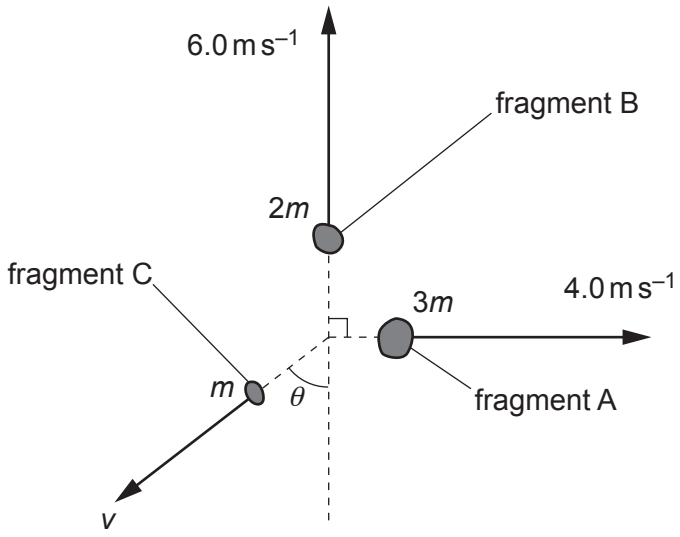

Fig. 3.1

Fragment A has a mass of $3m$ and moves away from the explosion at a speed of $4.0\,m\,s^{-1}$.

Fragment B has a mass of $2m$ and moves away from the explosion at a speed of $6.0\,m\,s^{-1}$ at right angles to the direction of A.

Fragment C has a mass of m and moves away from the explosion at a speed v and at an angle θ as shown in Fig. 3.1.

Calculate:

(i) the angle θ

θ = ...° [3]

© UCLES 2023

(ii) the speed v.

v = ... $m\,s^{-1}$ [2]

(c) The firework in **(b)** contains a chemical that has mass 5.0 g and has chemical energy per unit mass $700\,J\,kg^{-1}$. When the firework explodes, all of the chemical energy is transferred to the kinetic energy of fragments A, B and C.

(i) Show that the total chemical energy in the firework is 3.5 J.

[1]

(ii) Calculate the mass m.

m = ... kg [3]

[Total: 11]

4 **(a)** For a progressive wave, state what is meant by the frequency.

.....

..... [1]

(b) A loudspeaker, microphone and cathode-ray oscilloscope (CRO) are arranged as shown in Fig. 4.1.

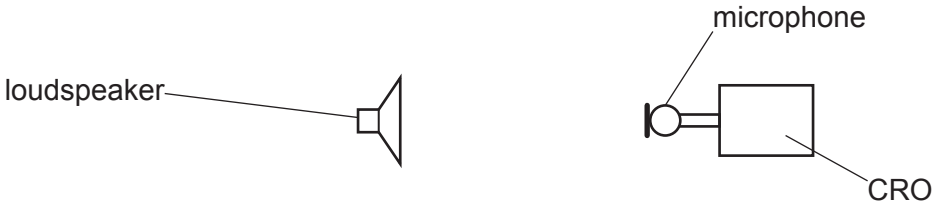

Fig. 4.1

The loudspeaker is emitting a sound wave which is detected by the microphone and displayed on the screen of the CRO as shown in Fig. 4.2.

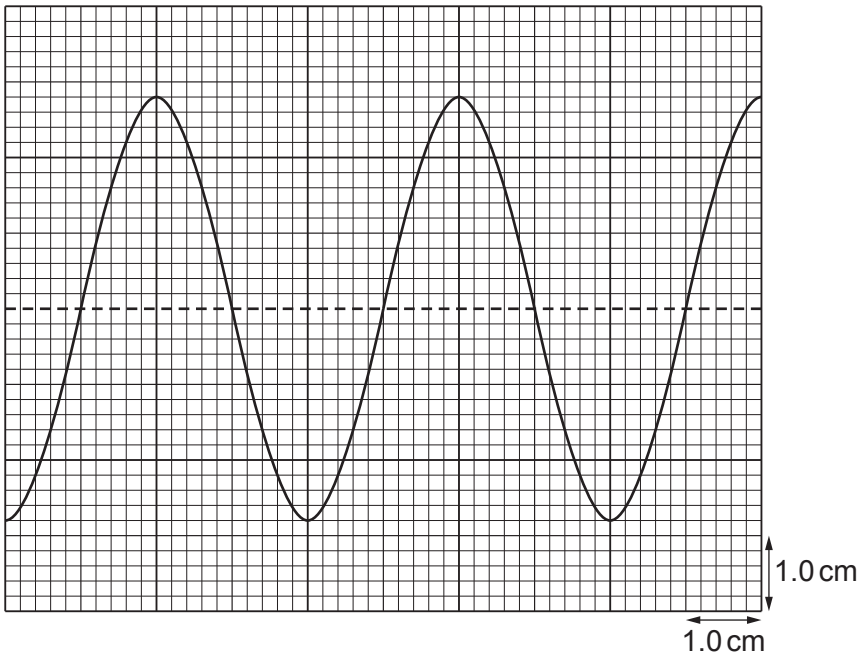

Fig. 4.2

The time-base on the CRO is set to 0.50 ms cm^{-1} and the *y*-gain is set to 0.20 V cm^{-1}.

Calculate:

(i) the frequency of the sound wave

frequency = ... Hz [2]

(ii) the amplitude of the signal received by the CRO.

amplitude = ... V [1]

(c) The intensity of the sound wave in **(b)** is reduced to a quarter of its original intensity without a change in frequency. Assume that the amplitude of the signal received by the CRO is proportional to the amplitude of the sound wave.

On Fig. 4.2, sketch the trace that is now seen on the screen of the CRO. [3]

(d) A metal sheet is now placed in front of the loudspeaker in **(b)**, as shown in Fig. 4.3.

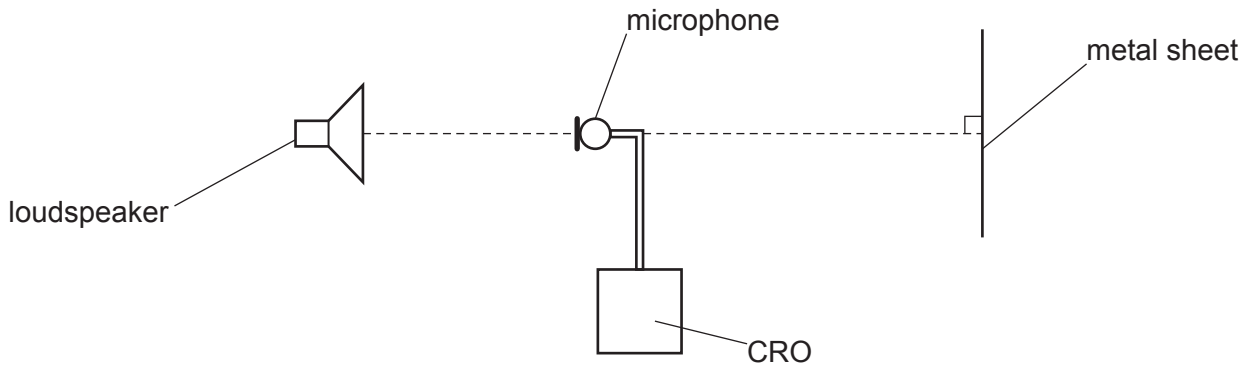

Fig. 4.3

A stationary wave is formed between the loudspeaker and the metal sheet.

(i) State the principle of superposition.

.....

.....

..... [2]

(ii) The initial position of the microphone is such that the trace on the CRO has an amplitude minimum. It is now moved a distance of 1.05 m away from the loudspeaker along the line joining the loudspeaker and metal sheet.

As the microphone moves, it passes through three positions where the trace has an amplitude maximum before ending at a position where the trace has an amplitude minimum.

Determine the wavelength of the sound wave.

wavelength = ... m [2]

© UCLES 2023

(iii) Use your answers in **(b)(i)** and **(d)(ii)** to determine the speed of the sound in the air.

speed = ... $m\,s^{-1}$ [2]

[Total: 13]

5 A student sets up a circuit with a battery, an ammeter, a heater and a light-dependent resistor (LDR) all in series.

The battery has negligible internal resistance.

A voltmeter is connected across (in parallel with) the heater.

(a) On Fig. 5.1, complete the circuit diagram of this arrangement.

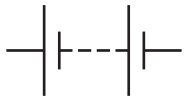

Fig. 5.1

[3]

(b) The heater is a wire made of metal of resistivity $1.1 \times 10^{-6}\,\Omega\,m$. The wire has length 2.0 m and cross-sectional area $3.8 \times 10^{-7}\,m^2$.

The reading on the voltmeter is 4.8 V.

Calculate:

(i) the resistance of the heater

resistance = ... Ω [2]

(ii) the reading on the ammeter.

reading on ammeter = ... A [1]

© UCLES 2023

(c) The heater is replaced by a new wire. The new wire is made of the same metal as the wire in **(b)** and has the same length but a larger diameter.

The resistance of the LDR remains constant.

(i) State and explain whether the new wire has a resistance that is greater than, less than or the same as that of the wire in **(b)**.

.....

.....

..... [2]

(ii) State and explain whether the new reading on the voltmeter is greater than, less than or equal to 4.8 V.

.....

.....

..... [2]

[Total: 10]

6 **(a)** Define the Young modulus.

.....

..... [1]

(b) A uniform wire is suspended from a fixed support. Masses are added to the other end of the wire, as shown in Fig. 6.1.

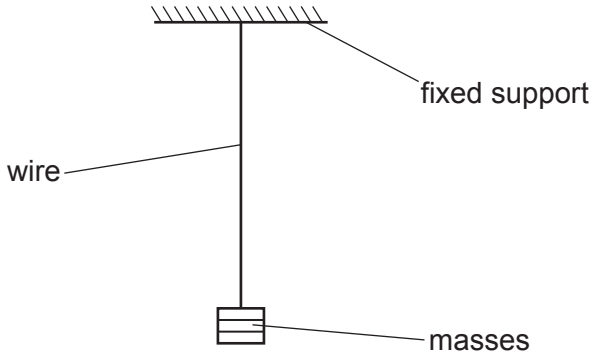

Fig. 6.1 (not to scale)

The variation of the length l of the wire with the force F applied to the wire by the masses is shown in Fig. 6.2.

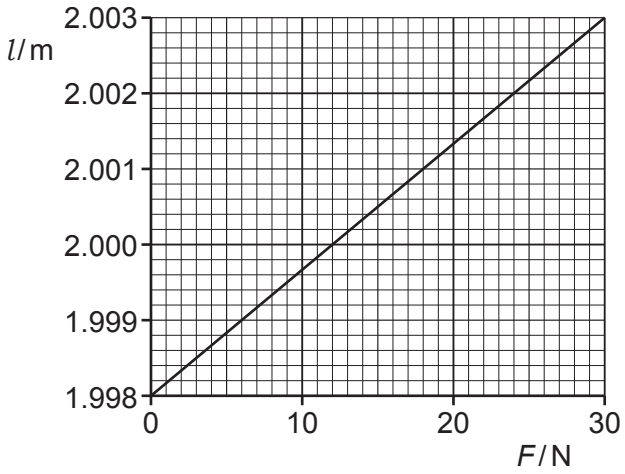

Fig. 6.2

The cross-sectional area of the wire is 0.95 mm^2.

(i) Determine the unstretched length of the wire.

unstretched length = ... m [1]

(ii) For an applied force F of 30 N, determine:

- the stress in the wire

stress = ... Pa

- the strain of the wire.

strain = ...
[3]

[Total: 5]

BLANK PAGE

© UCLES 2023

7 **(a)** Table 7.1 shows incomplete data for three flavours (types) of quark. The elementary charge is e.

Table 7.1

flavour	quark		antiquark	
	symbol	charge / e	symbol	charge / e
up	u	$+\frac{2}{3}$	$\overline{\text{u}}$	
down	d		$\overline{\text{d}}$	
charm	c		$\overline{\text{c}}$	

Complete Table 7.1 by inserting the missing charges. [2]

(b) Using the symbols given in Table 7.1, state a possible quark combination for the following hadrons:

(i) a neutral baryon

..... [1]

(ii) a meson with a charge of $+e$.

..... [1]

(c) Quarks are fundamental particles.

Electrons are in another group (class) of fundamental particle.

(i) State the name of this group.

..... [1]

(ii) State the name of another particle in this group.

..... [1]

[Total: 6]

© UCLES 2023

BLANK PAGE

Permission to reproduce items where third-party owned material protected by copyright is included has been sought and cleared where possible. Every reasonable effort has been made by the publisher (UCLES) to trace copyright holders, but if any items requiring clearance have unwittingly been included, the publisher will be pleased to make amends at the earliest possible opportunity.

To avoid the issue of disclosure of answer-related information to candidates, all copyright acknowledgements are reproduced online in the Cambridge Assessment International Education Copyright Acknowledgements Booklet. This is produced for each series of examinations and is freely available to download at www.cambridgeinternational.org after the live examination series.

Cambridge Assessment International Education is part of Cambridge Assessment. Cambridge Assessment is the brand name of the University of Cambridge Local Examinations Syndicate (UCLES), which is a department of the University of Cambridge.

© UCLES 2023